SigenStor-3S-(5-54.24), SigenStor-5S-(5-54.24), SigenStor-6S-(5-54.24)

Installation Guide

Version: Draft A
Release date: 2024-06-01



Caution

- **Trained or experienced electrical personnel are required to operate the equipment.**
- **Operators should be familiar with national/regional laws, regulations and standards, the structure and working principle of relevant systems.**
- **Please read carefully the operating requirements and precautions in this document and "*Important Notice*" before operating. Failure to do so may result in damage to the equipment that is not covered by the warranty.**
- **Please consult with the owner for expansion requirements (for example, adding battery packs) before operating. If any, please reserve necessary expansion space and cable length during installation.**

1 Product Introduction

1.1 Product Model No.

Model No.*	Energy Controller Model	EV DC Charging Module	No. Of SigenStor BAT 5.0 or SigenStor BAT 8.0 or SigenStor BAT 6.0 or SigenStor BAT 10.0
SigenStor-3S(-EV12)-(5-54.24)	SigenStor EC 3.0 SP	**NA:** no SigenStor EV DC charging module get installed; **EV12:** SigenStor EVDC 12 7.5S2;	1-6
SigenStor-5S(-EV12)-(5-54.24)	SigenStor EC 5.0 SP		
SigenStor-6S(-EV12)-(5-54.24)	SigenStor EC 6.0 SP		
*For specific model number, please refer to the Sigen Energy Storage product datasheet.			

1.2 Equipment Appearance and Dimensions

SigenStor-5S-(8-40)

Tips

The SigenStor-5S-16 serves as an illustration of its physical features.

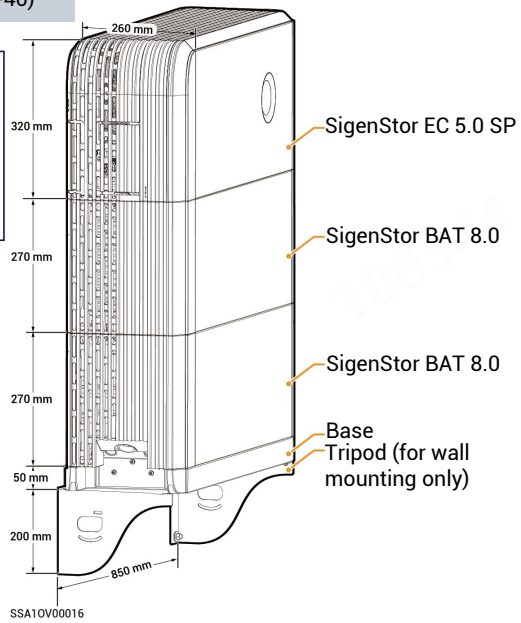

SigenStor EC 5.0/6.0 SP Left View

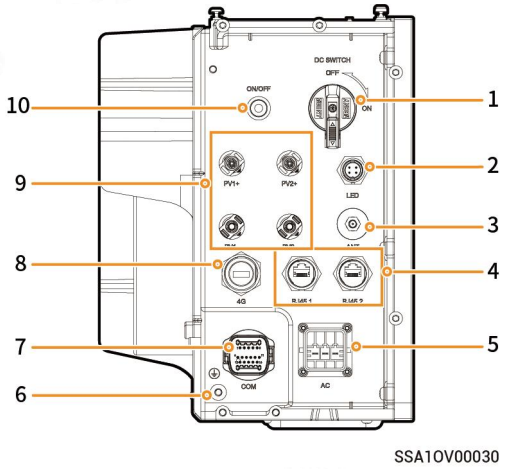

S/N	Name	Marking
1	DC switch	DC SWITCH
2	Decorative cover light strip connector	LED
3	Antenna interface	ANT
4	Cable interface	RJ45 1/ RJ45 2
5	AC output interface	AC
6	Ground screw	-
7	Communication interface	COM
8	Sigen CommMod interface	4G
9	DC input interface	PV1+/PV2+/ PV1-/PV2-
10	Switch button	ON/OFF

2 Pre-installation Check

- **According to the packing list, check whether the components are complete and in good appearance. If any abnormality occurs, contact your sales agent in time.**
- **Check personal protective equipment and installation tools to ensure that they are complete; If not, please make them up.**
- **Check the customer-provided cable to ensure that the quantity and specifications are correct; if not, prepare again.**

Protective equipment


Safety hat


Safety glasses


Dust mask


Protective gloves


Insulating gloves


Insulating shoes

Installation tool

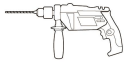
Power drill


Vacuum cleaner

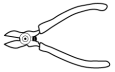
Wire cutter

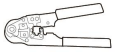
Crimp tool


Crimping pliers


Wire stripper


Scissors


Cable tie


Heat shrinkable sleeve


Heat gun

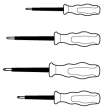
Insulation screwdriver set


Lock (Lock bar diameter ≤5 mm)

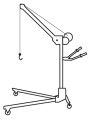
Lift (used with ≥3 SigenStor BATs)


Stainless steel covered plastic steel rope (load capacity: ≥250 kg
Diameter: 3 mm)


Open-end wrench (model: H4TW0001
Manufacturer: Amphenol)


Crimping pliers (model: H4TC0003
Manufacturer: Amphenol)


Insulation sleeve set

Torque socket wrench

Marker


Rubber mallet


Level


Tape measure

Installer-provided cable

S/N	Cable name		Recommended specifications
1	Protective ground cable of inverter housing		Outdoor single-conductor copper cable Cross-sectional area of core conductor: 4–6 mm²; Outer diameter: 4–8 mm
2	AC cable	The inverter connected to the distribution panel	Outdoor three-core copper cable (L, N, PE) Cross-sectional area of core conductor: 4–6 mm²; Outer diameter: 13–21 mm
3	RS485 signal cable	The inverter connected to the power sensor	Outdoor shielded twisted pair Cross-sectional area of core conductor: 0.5–0.75 mm² (multi-core flexible conductor, Tubular terminal needed); 0.5–1 mm² (single-strand hard conductor, no tubular terminal needed) Outer diameter: 4.5–6.5 mm Cable length: ≤ 1000 m Baud rate: ≤ 9600 bps
4	RJ45 network cable	The inverter connected to the router	Outdoor eight-conductor shielded twin-twisted pair cable Cross-sectional area of core conductor: 0.13–0.2 mm²; Outer diameter: 4–7.5 mm Cable length: ≤ 100 m[1]
5	DC input cable of inverter (Ignore this cable in case of SigenStor AC inverters)		Outdoor photovoltaic cable Cross-sectional area of core conductor: 4–6 mm²; Outer diameter: 5.5–9 mm

Note [1]: The cable length should be limited for good communication. Too long cable degrades the communication effect. FE communication distance: ≤ 100 m.

Tips

Recommended specifications for cables connecting power sensors to Distribution panel and to the grid, as well as step-by-step instructions for wiring, can be found in the accompanying documentation for each respective model.

Tips

The warranty applies when the equipment has been installed properly for its intended use and in accordance with the operating instructions.

Installation environment

- Do not install the equipment in smoky, flammable, or explosive environments.
- Avoid exposing the equipment to direct sunlight, rain, standing water, snow, or dust. Install the equipment in a sheltered place. Take preventive measures in operating areas prone to natural disasters such as floods, mudslides, earthquakes, and typhoons.
- Do not install the equipment in an environment with strong electromagnetic interference.
- Ensure that the temperature and humidity of the installation environment comply with the equipment's requirements.
- The equipment should be installed in an area that is at least 500 m away from corrosion sources that may result in salt damage or acid damage (corrosion sources include but are not limited to seaside, thermal power plants, chemical plants, smelters, coal plants, rubber plants, and electroplating plants).

Installation position

- The equipment supports both indoor and outdoor installations. Installation is subject to the descriptions in this section and the requirements of local laws and regulations.
- Do not tilt or overturn the equipment to ensure that it is installed horizontally.
- Do not install the equipment in places easily touched by children.
- Do not install the equipment in places with fire or damp.
- Please keep away from the daily work and living places.
- Do not install the equipment in a sealed, poorly ventilated location without fire protection measures and difficult access for firefighters.
- The equipment is hot when it is running. If the equipment is installed indoors, please ensure good indoor ventilation and avoid significant indoor temperature rise by 3°C while the equipment is running. Otherwise, the equipment will be derated.
- Do not install the equipment in mobile scenarios such as RVS, cruise ships, and trains.
- You are advised to install the equipment in a location where you can easily access, install, operate, maintain it, and view the indicator status.
- When installing the equipment in the garage, do not install the equipment in the position where the vehicle passes through to avoid collision.

Mounting surface

- Do not install the equipment on a flammable carrier.
- The installation carrier must meet load-bearing requirements. Solid brick-concrete structure, concrete walls, and ground are recommended.
- The surface of the installation carrier must be smooth and the installation area must meet the installation space requirements.
- No water or electricity is routed inside the carrier to prevent drilling hazards during equipment installation.

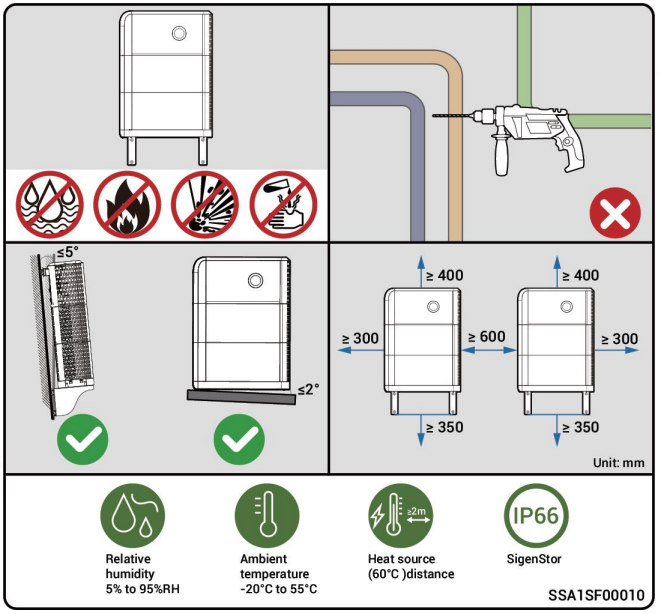

4 Installation of inverter and battery pack

Tips

- Floor mounting supports up to six SigenStor BATs or five SigenStor BATs plus one SigenStor EVDC.
- Wall mounting: When made of solid bricks, concrete, or similar materials, walls can be installed with up to two SigenStor BATs or two SigenStor BATs plus one SigenStor EVDC. Wooden walls can be installed with up to two SigenStor BATs or one SigenStor BAT plus one SigenStor EVDC.
- When installing three or more SigenStor BATs on the floor, use Lift.
- Multiple SigenStor BATs can be installed onsite based on the actual configuration.
- If the floor is prone to stagnant water, please set up a waterproofing platform or install it on the wall.
- The equipment is heavy, do not slip off when handling the equipment to avoid the equipment falling and injuring the operator.
- SigenStor BAT is forbidden to be used after falling, please buy a new one.
- Do not drag the equipment during installation.

4.1 Floor Installation

Tips

- If the ground is uneven, leveling plates or adjustable feet can be used for leveling, depending on the product received.
- If the installation package the owner receives contains no adjustable feet, only leveling plates can be used for leveling. If both are available, either leveling tool can be used. Please install the equipment according to the actual needs of the owner.
- Please avoid using adjustable feet for leveling in earthquake-prone areas.

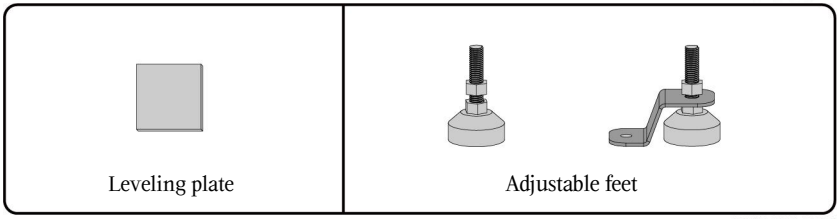

SSA10V00034

1

Leveling with leveling plates

Tips

If the bubble level is not centered, use a leveling plate to adjust.

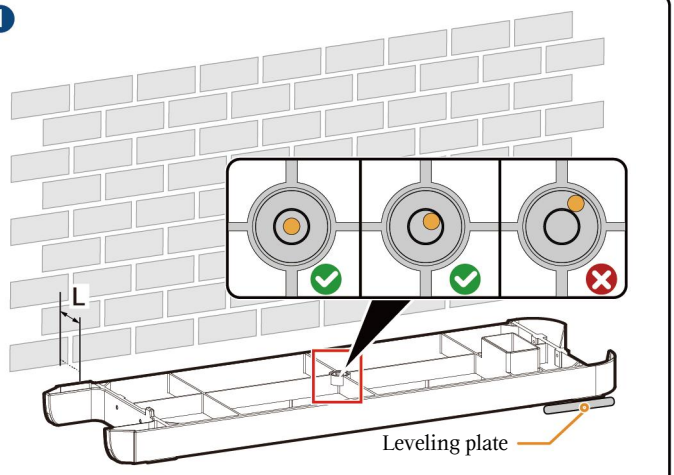

SigenStor BAT	L
≤2	L ≥ 35 mm
3 to 6	35 mm ≤ L ≤ 65 mm

SSA1IN00156

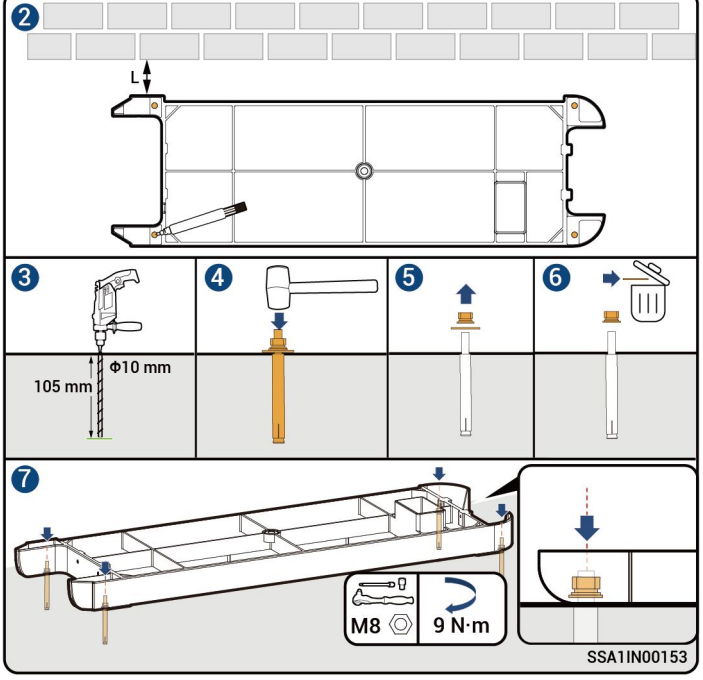

SSA1IN00153

Leveling with adjustable feet

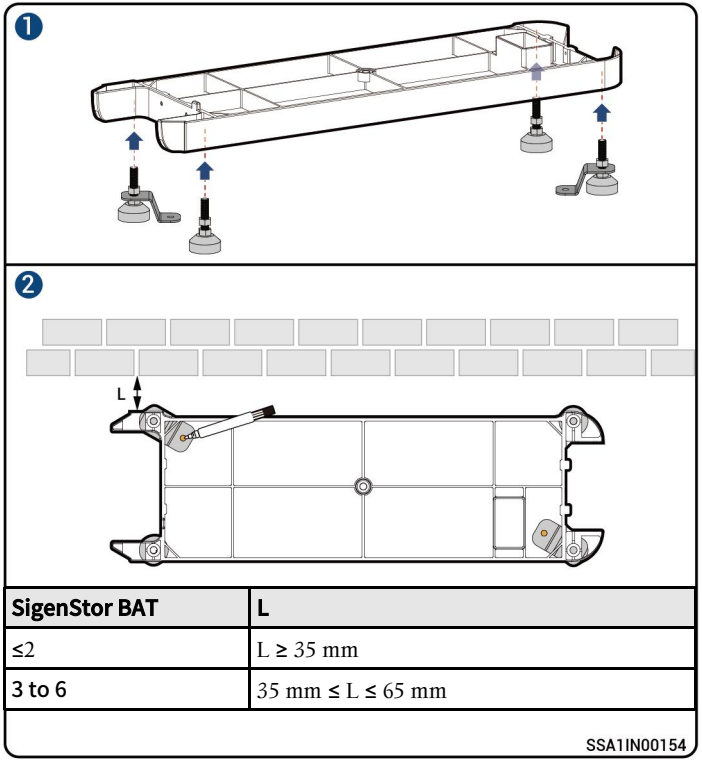

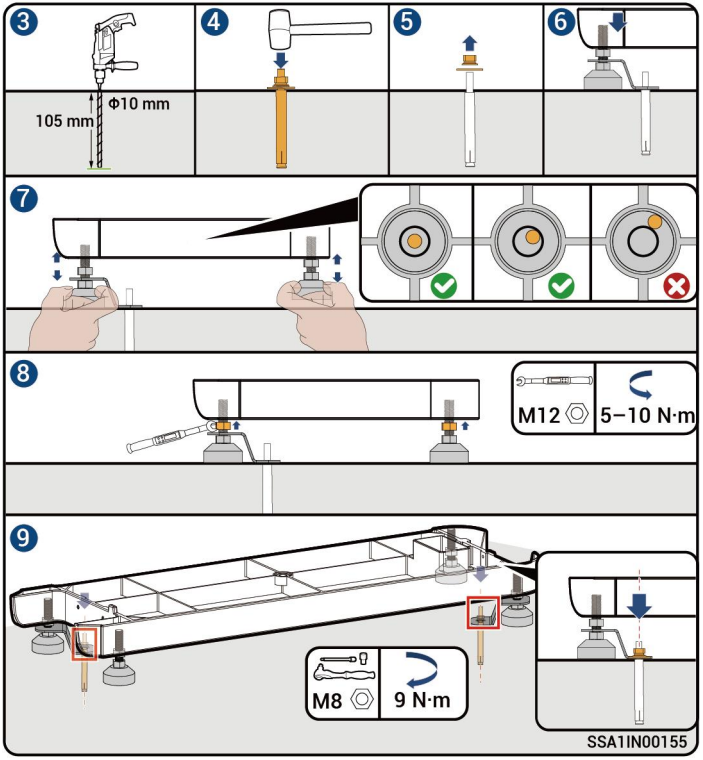

2 INV1 is the mounting hole on the left side of the inverter for wall installation, while INV2 is the mounting hole on the right side for wall installation.

Calculation formula for punch height (L1 and L2 should be measured from the upper surface of the base)	
Without SigenStor EVDC Series	With SigenStor EVDC Series
L1= ***N*** x 270 mm + 261 mm ± 3 mm **L2=** ***N*** x 270 mm + 254 mm ± 3 mm **N** is the number of SigenStor BATs and **N** ranges from 3 to 6.	**L1=** ***n*** x 270 mm + 270 mm + 261 mm ± 3 mm **L2=** ***n*** x 270 mm + 270 mm + 254 mm ± 3 mm **n** is the number of SigenStor BATs and **n** ranges from 3 to 5.

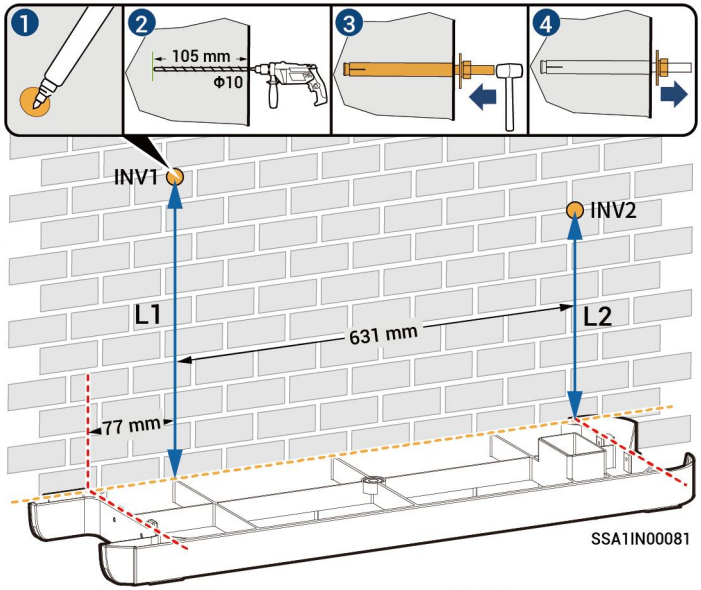

3 Before installing the handle, please use a Torque socket wrench to measure the screws and confirm that the screws on Sigen BAT are securely tightened with a torque of 4.5 N·m (± 0.45 N·m).

Caution

- Use the new handle supplied with the inverter for your installation operation.
- The "OUT" lettering on the handle must face outwards.
- Do not use a handle with stoppers that fell off or damaged for your installation operation. (Including but not limited to rust, paint peeling, deformation, and fracture)
- The handle is a personal asset of the owner. After use, it must be handed over to the owner for future use and must not be taken away from the installation site.
- The handle shall not be used more than 100 times. The handle that exceeds the use limits shall be scrapped.

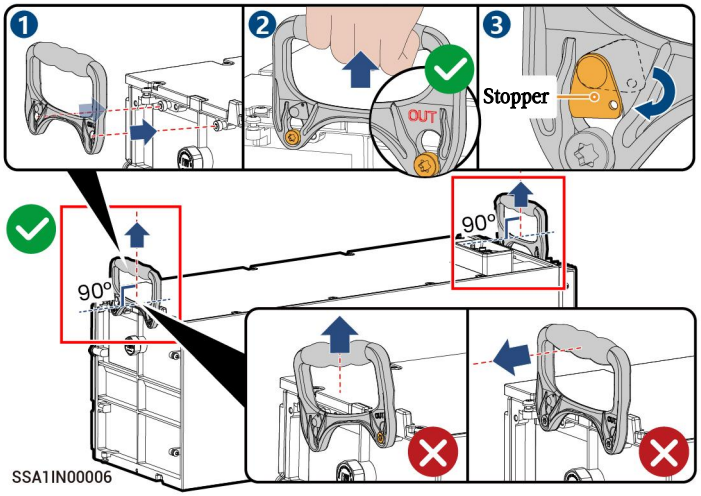

4 SigenStor BAT is kept horizontally and mounted vertically downwards.

SigenStor BAT≤ 2

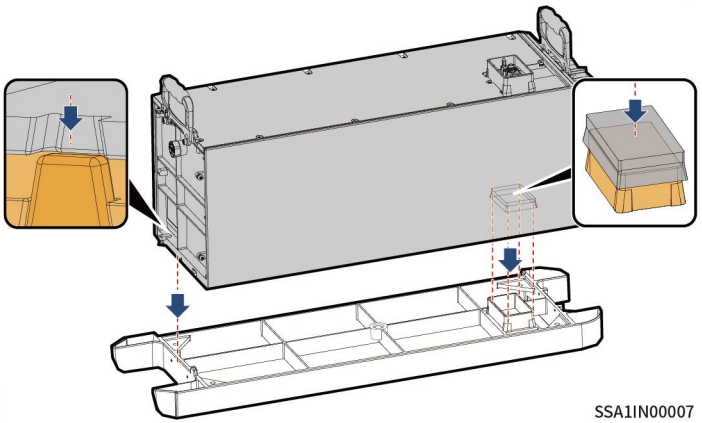

SigenStor BAT ≥ 3

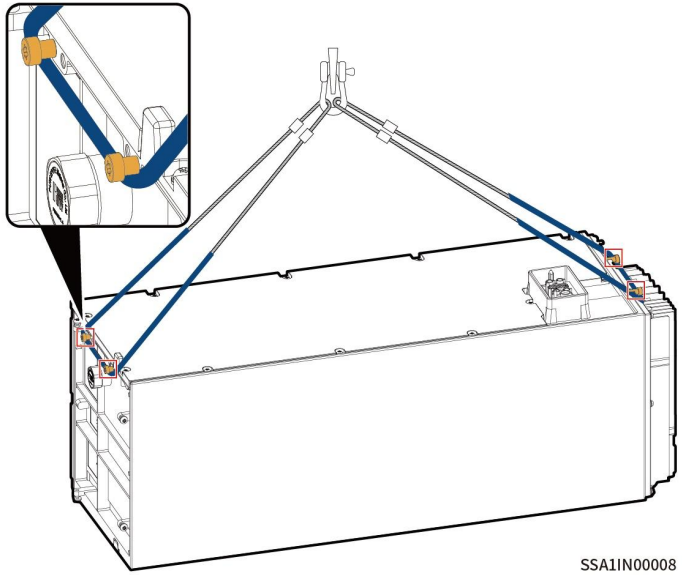

Tips

During lifting operations, the area where the sling comes in contact with the equipment should be wrapped with a protective layer to avoid damage to the equipment.

5 For models with SigenStor EVDC series, place SigenStor EVDC.

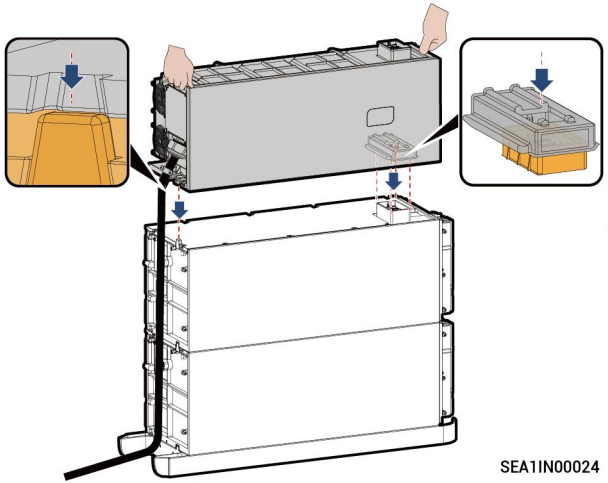

6 For information on how to place SigenStor EC, please refer to step 4 .

Tips

SigenStor EVDC 12 7.5S2 is initial set as 12.5kW DC output, but support to be upgrade to 25kW DC output by buying and activating software license.

For specific instruction for how to buy the license, please refer to mySigen App Installer Manual.

7

Without SigenStor EVDC Series

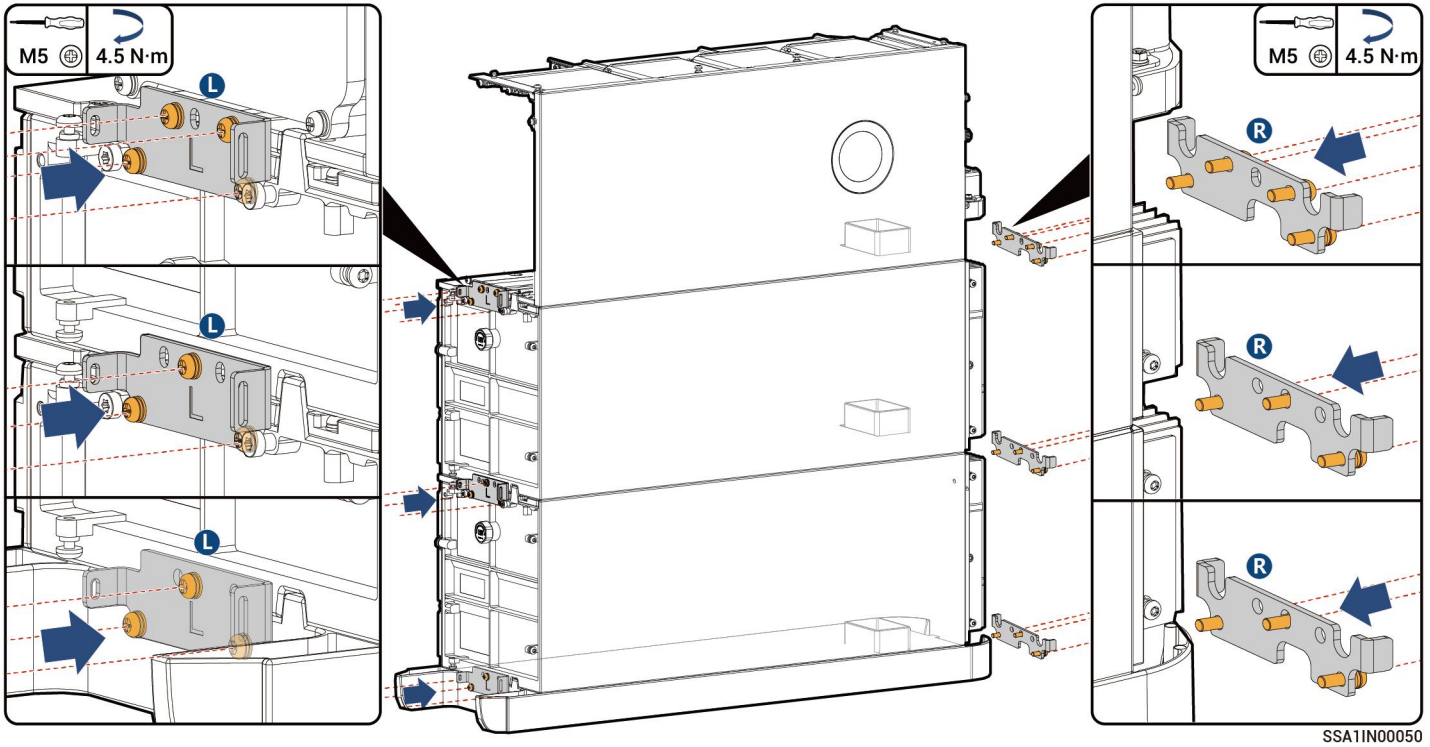

With SigenStor EVDC Series

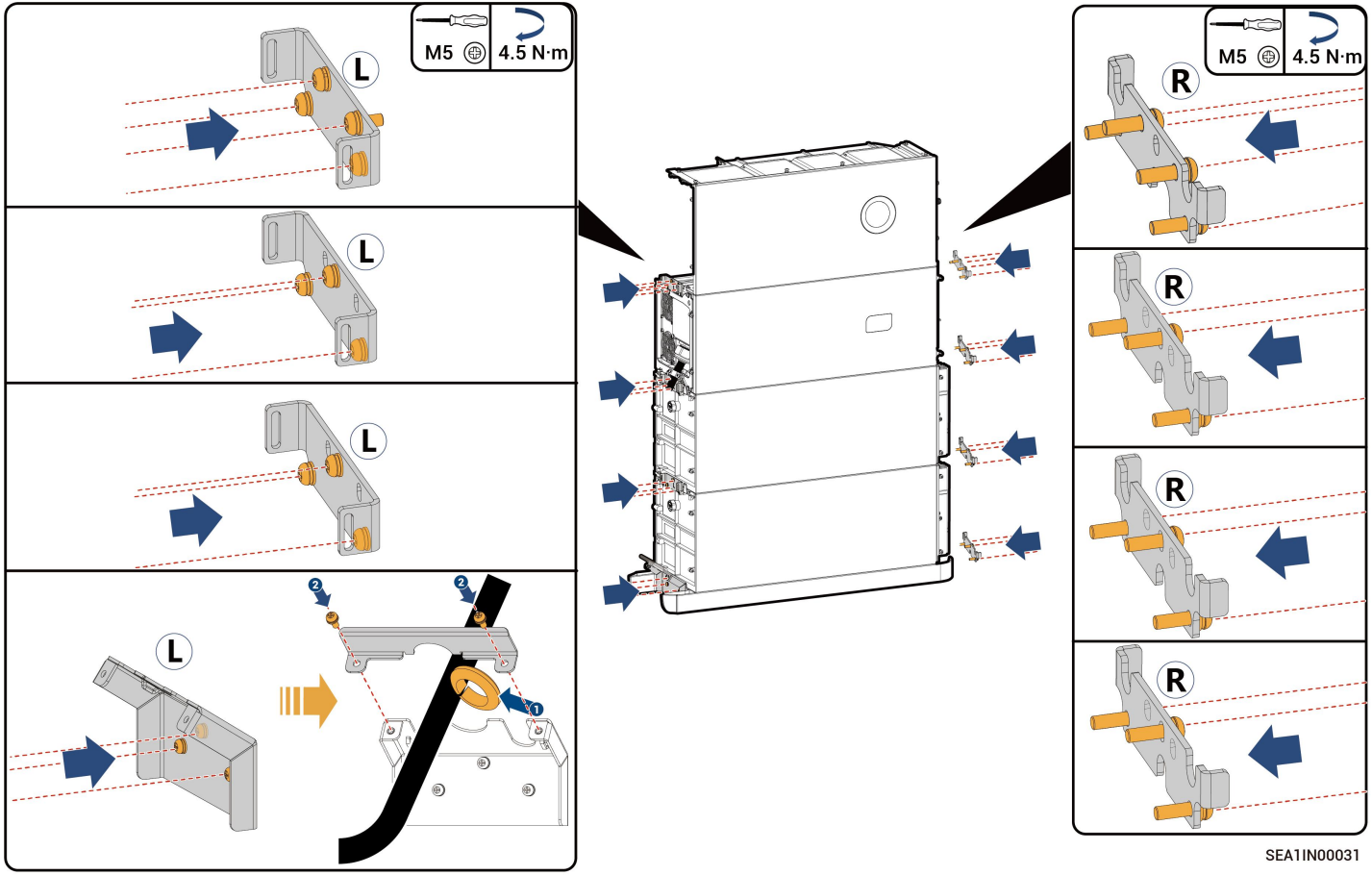

With SigenStor EVDC Series

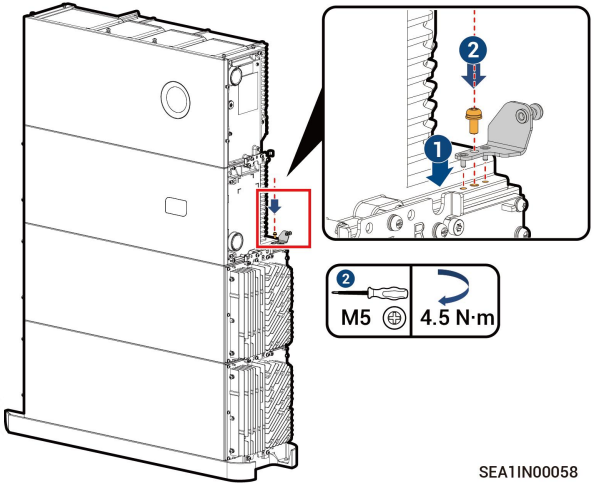

8 3 4 are optional steps. Simply installing the left-side inverter padlock can help prevent theft of the equipment.

SigenStor BAT ≥ 3

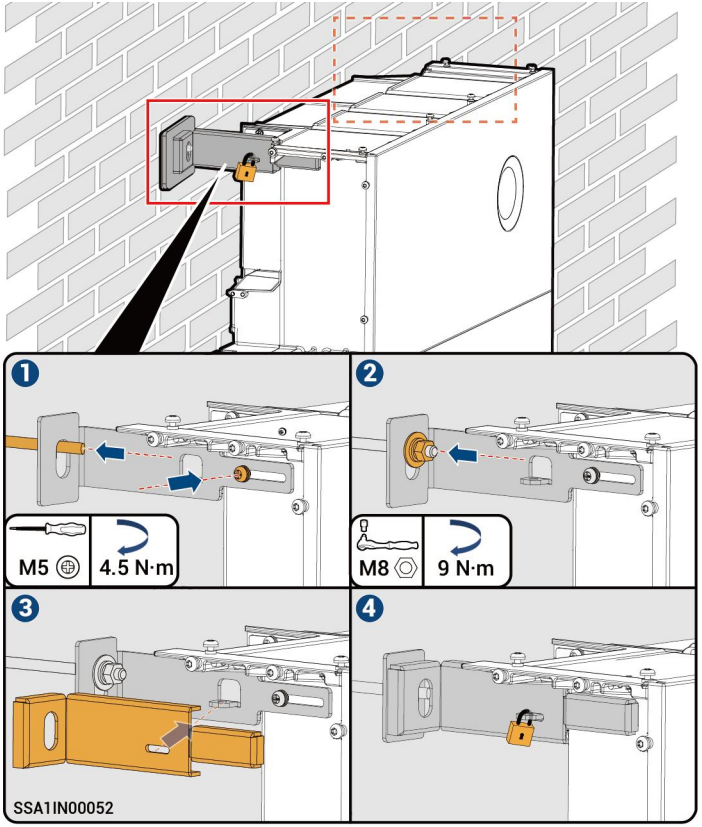

4.2 Wall Mounting

Wall scenes, such as solid bricks and concrete

1

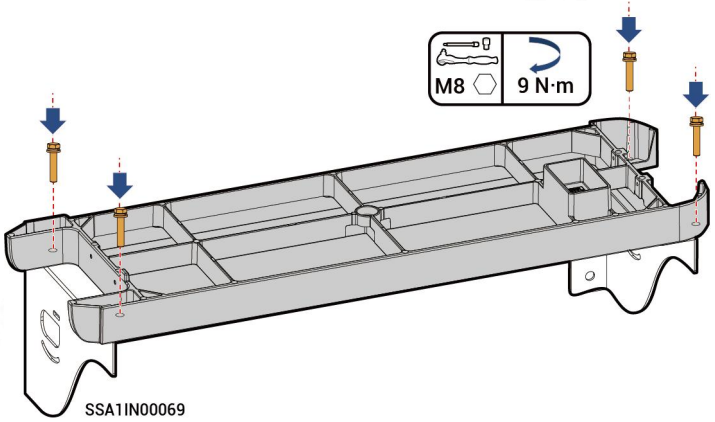

2

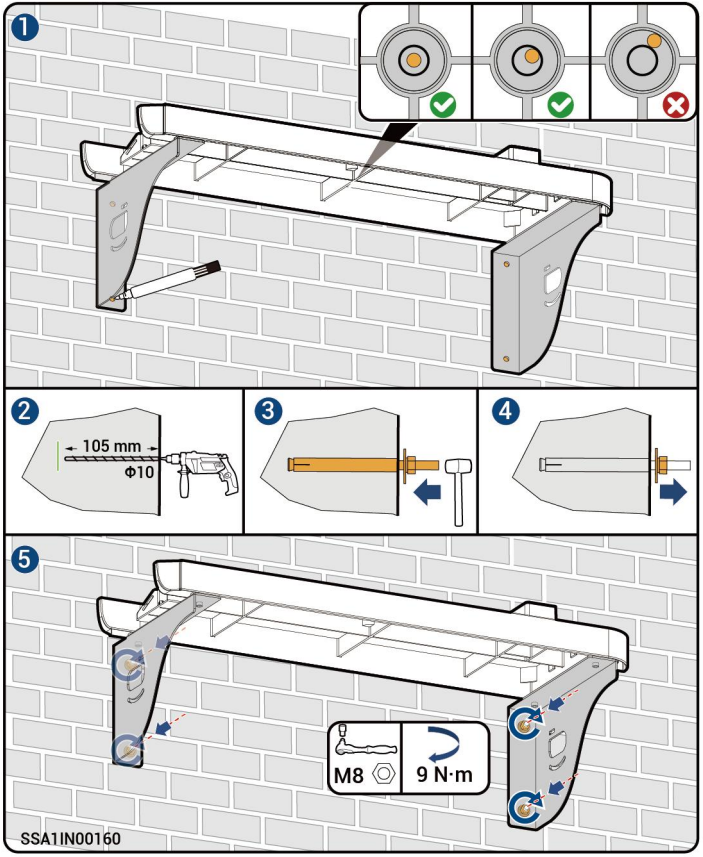

3

Calculation formula for punch height (L1 and L2 should be measured from the upper surface of the base)	
Without SigenStor EVDC Series	With SigenStor EVDC Series
L1= *N* x 270 mm + 261 mm ± 3 mm L2= *N* x 270 mm + 254 mm ± 3 mm	L1= *N* x 270 mm + 270 mm + 261 mm ± 3 mm L2= *N* x 270 mm + 270 mm + 254 mm ± 3 mm

Note: *N* is the number of SigenStor BATs and *N* is 1 or 2.

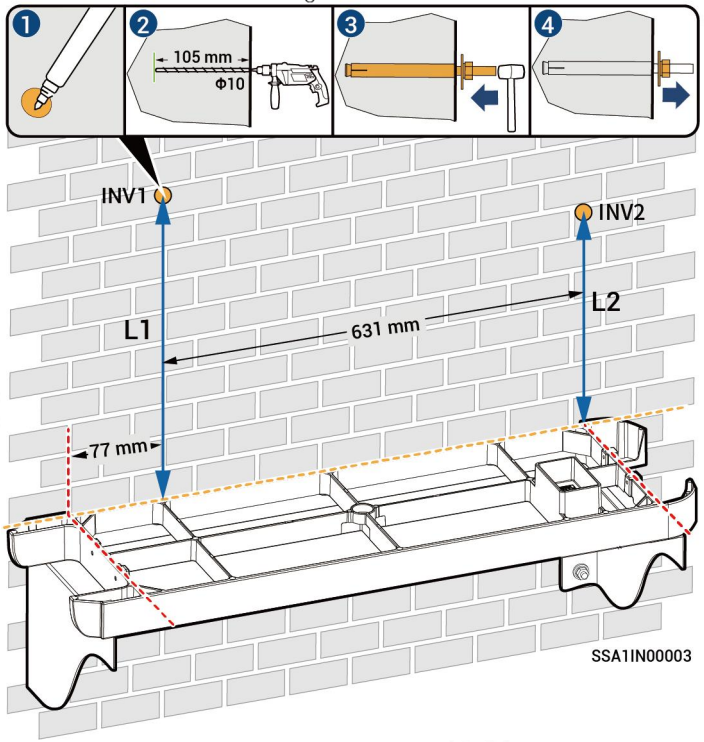

4 For details about how to place the SigenStor BAT, see Steps 3 4 in Section *4.1 Floor installation.*

5 For models with SigenStor EVDC series, please refer to Step 5 in *Section 4.1 Floor Installation* for placing the SigenStor EVDC.

6 For details about how to place the SigenStor EC, see Steps 6 in Section *4.1 Floor installation.*

7 For the installation of the Base bracket , please refer to Step 7 *Section 4.1 Floor Installation.*

8 For the installation of the fasteners for a wall-mounted inverter, please refer to Step 8 in Section *4.1 Floor installation.*

Wooden wall scenes

1

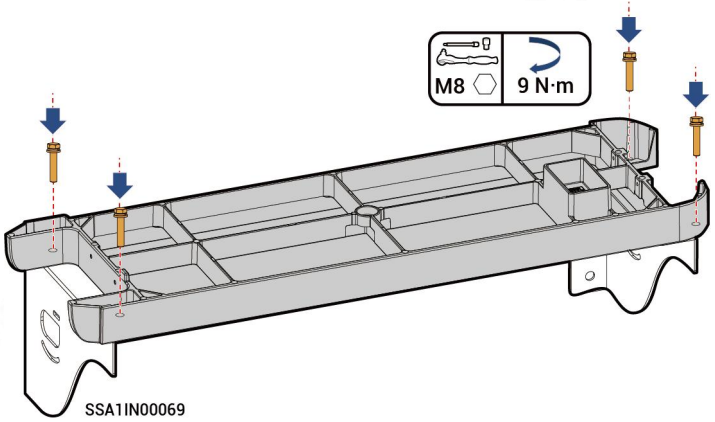

SSA1IN00069

2

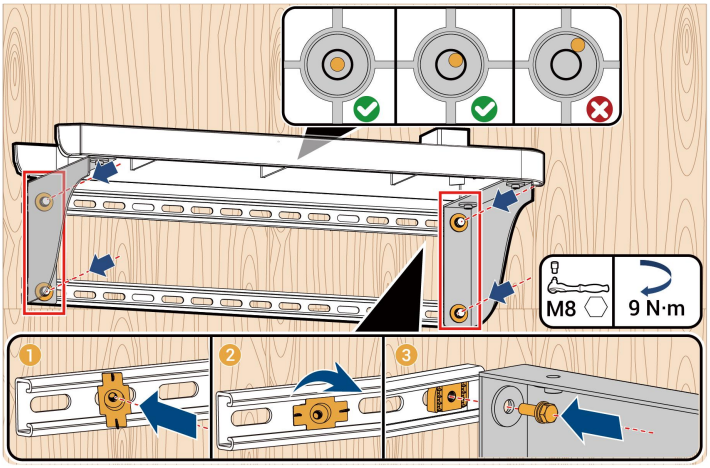

SSA1IN00167

3

Calculation formula for punch height	
Without SigenStor EVDC Series	With SigenStor EVDC Series
L=335.5 mm + ***N***(***N*** ≤ 2) x 270 mm ± 3.5 mm	L= 335.5 mm + 270 mm + 270 mm ± 3.5 mm

Note: ***N*** is the number of SigenStor BATs and ***N*** is 1 or 2.

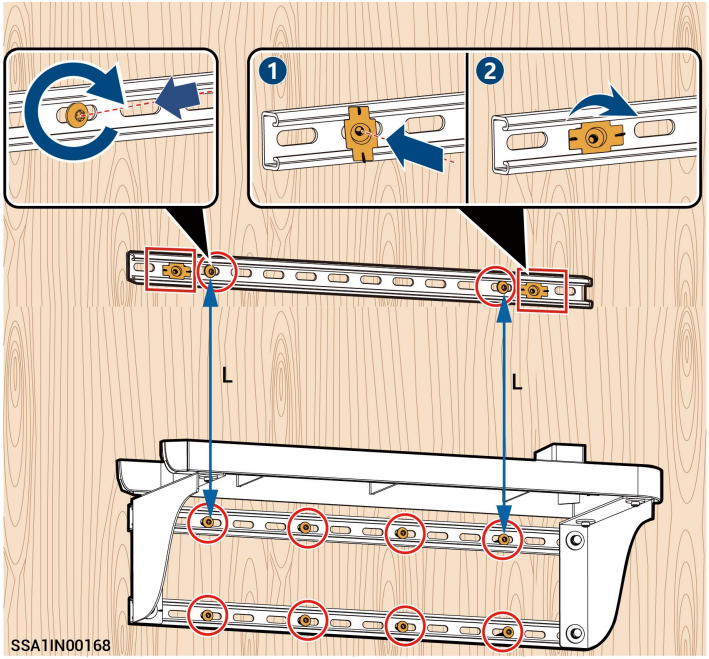

4 For details about how to place the SigenStor BAT, see Steps 3 4 in Section *4.1 Floor installation.*

5 For models with SigenStor EVDC series, please refer to Step 5 in *Section 4.1 Floor Installation* for placing the SigenStor EVDC.

6 For details about how to place the SigenStor EC, see Steps 6 in Section *4.1 Floor installation.*

7 For the installation of the Base bracket , please refer to Step 7 *Section 4.1 Floor Installation.*

8 For the installation of the fasteners for a wall-mounted inverter, please refer to Step 8 in Section *4.1 Floor installation.*

Warning

Before connecting cables, ensure that DC SWITCH is in the OFF state, and the front switch of the AC line is off.

Tips

- **The cable colors in the figure are used only to distinguish different lines. The cable colors are based on actual conditions.**
- **Bind the power cable separately from the signal cable.**
- **There are three routing schemes, Select them based on the actual situation.**
- **PVC wiring ducts or PVC conduits are recommended to wrap cables outside decorative parts. 50 × 30 mm PVC wiring ducts are recommended and PVC conduits with diameter not less than Φ63 are recommended.**

5.1 Recommended Cabling installation

Scheme I

- AC output cable
- RS485 signal cable
- Protective ground cable
- RJ45 cable
- DC input cable

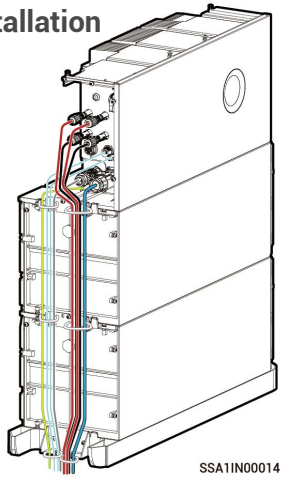

SSA1IN00014

Scheme II

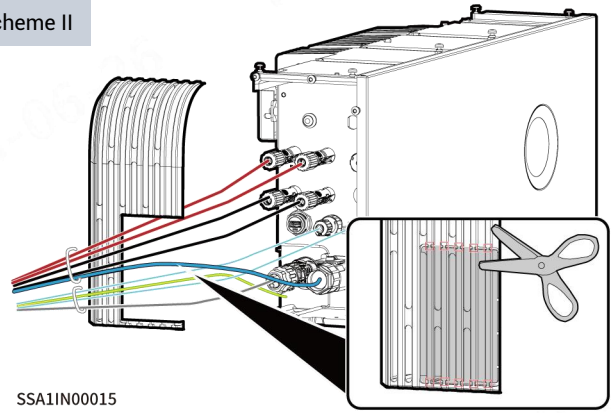

SSA1IN00015

Scheme III

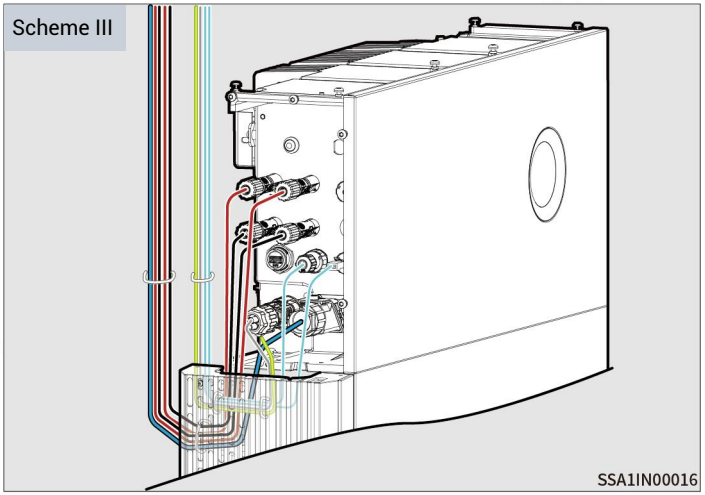

SSA1IN00016

5.2 Protective Ground Cable of Inverter

Tips

The protective ground wire should be grounded in close proximity.

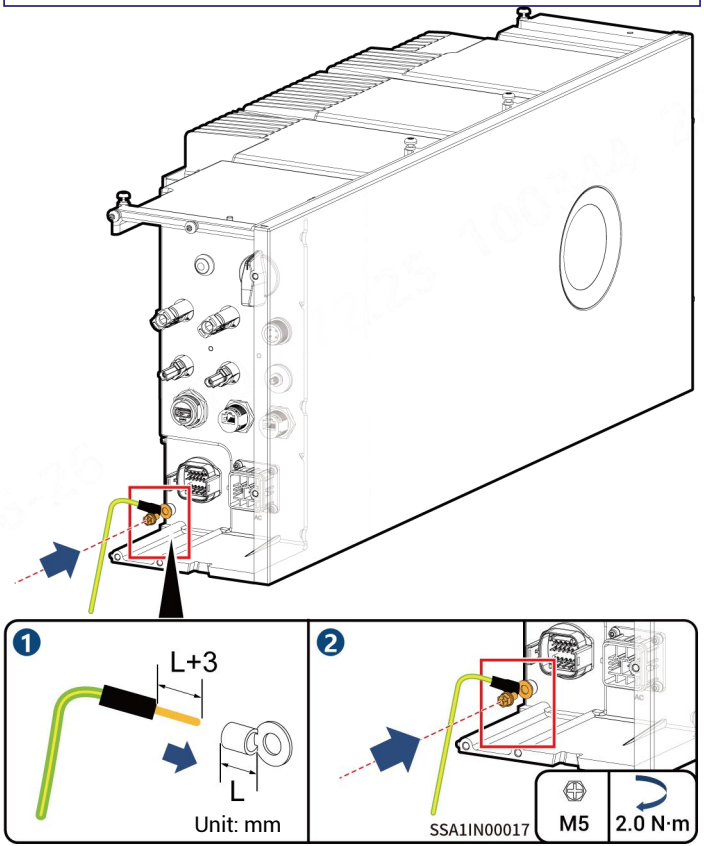

5.3 AC Output Cable of Inverter

Caution

When connecting to the Gateway or Distribution panel, L1, L2, L3, and N must be connected in order and cannot be mixed.

Unit: mm

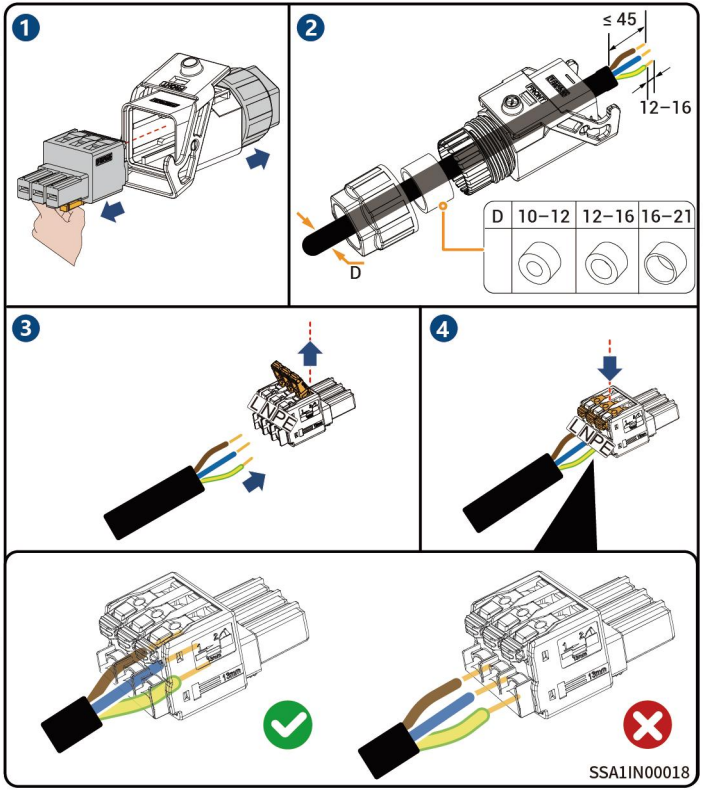

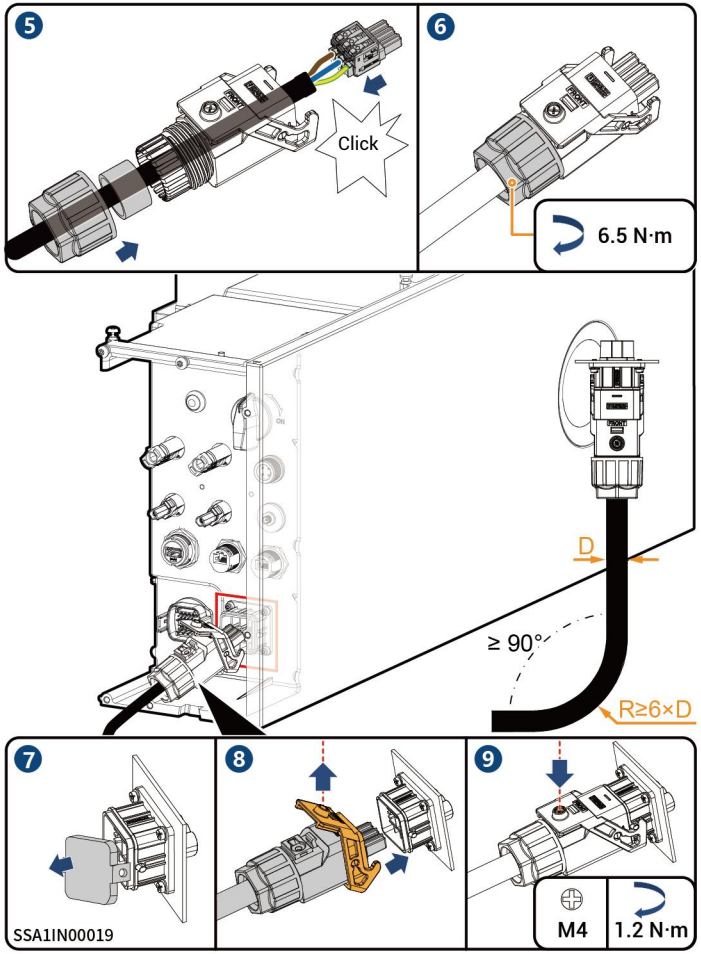

Tips

In the event of a fault, an alarm will be sent via the mySigen App with the description of how to solve the fault. For the meaning of the alarm code, please refer to Alarm List, which explains what e ach code means. The alarm would not disappear until it is soved.

5.4 RS485 Signal Cable

Tips

If a power sensor is used, one end of the RS485 signal cable is connected to the inverter while the other end to the power sensor.

5.4.1 Introduction to Correspondence

COM terminal of the inverter

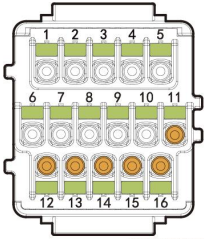

SSA1IN00020

Tips

The appearance and specific wiring of the power sensor can be found in the instruction manual delivered with the case.

Description	Interface definition	COM terminal of the inverter	Sigen Sensor SP-DH (SDM230Modbus)	Sigen Sensor SP-CT120-DH (SDM120CT 40mA)
(Reserved) DO1, connected to third party intelligent electric equipment, such as switch control and heat pump	Dry contact 1 - Common	1	–	–
	Dry contact 1 - NO	2	–	–
(Reserved) DO2, connected to third party intelligent electric equipment, such as switch control and heat pump	Dry contact 2 - Common	3	–	–
	Dry contact 2 - NO	4	–	–
For power scheduling, such as DRM and Ripple control	DI1, digital input 1	5	–	–
	DI2, digital input 2	6	–	–
	DI3, digital input 3	7	–	–
	DI4, digital input 4	8	–	–
	DI5, digital input 5	9	–	–
	Signal GND	10	–	–
RS485-2, COM port used to access the power sensor	PE signal shielding ground	12	–	–
	RS485 signal 2_B-	**13**	**6**	**9**
	RS485 signal 2_A+	**14**	**5**	**10**
RS485-1, custom RS485 port	PE signal shielding ground	11	–	–
	RS485 signal 1_A+	15	–	–
	RS485 signal 1_B-	16	–	–

5.4.2 DRM (Australia AS4777)

COM terminal of the inverter

Tips

According to Australia AS/NZS 4777.2:2020+A1:2021, solar inverters need to support thefunction of demand response mode (DRM), and DRM0 is a mandatory requirement.

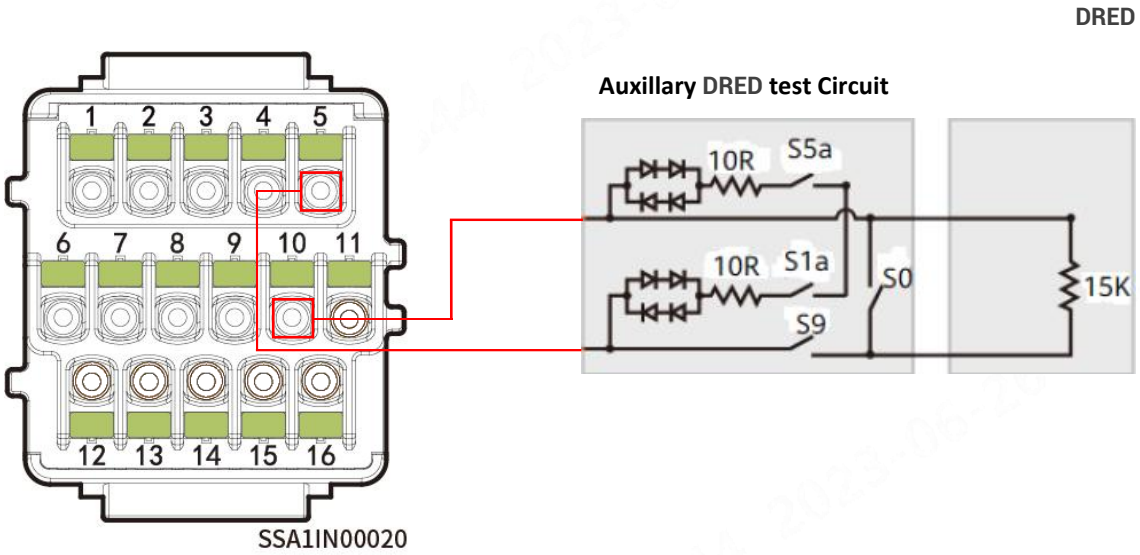

Description	Interface definition	COM terminal of the inverter	Requirement
DRM 0	DI1, digital input 1	5	● When switches S0 and S9 are switched on, the solar inverter should be turned off. ● When switch S0 is switched off, and switch S9 is switched on, the solar inverter should be grid-tied.
	Signal GND	10	

5.4.3 RS485 Signal Cable of inverter

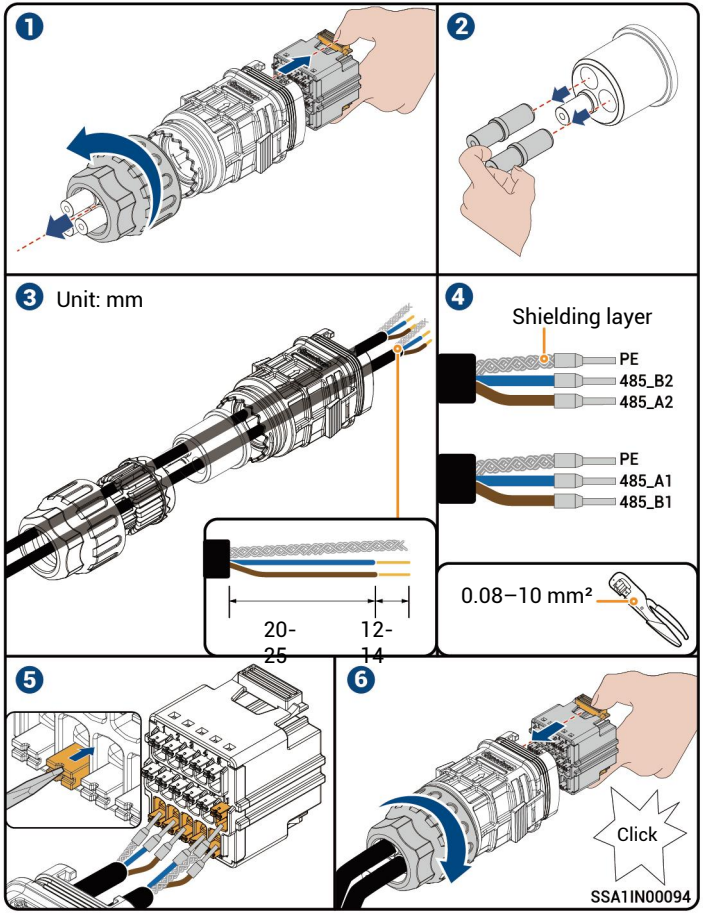

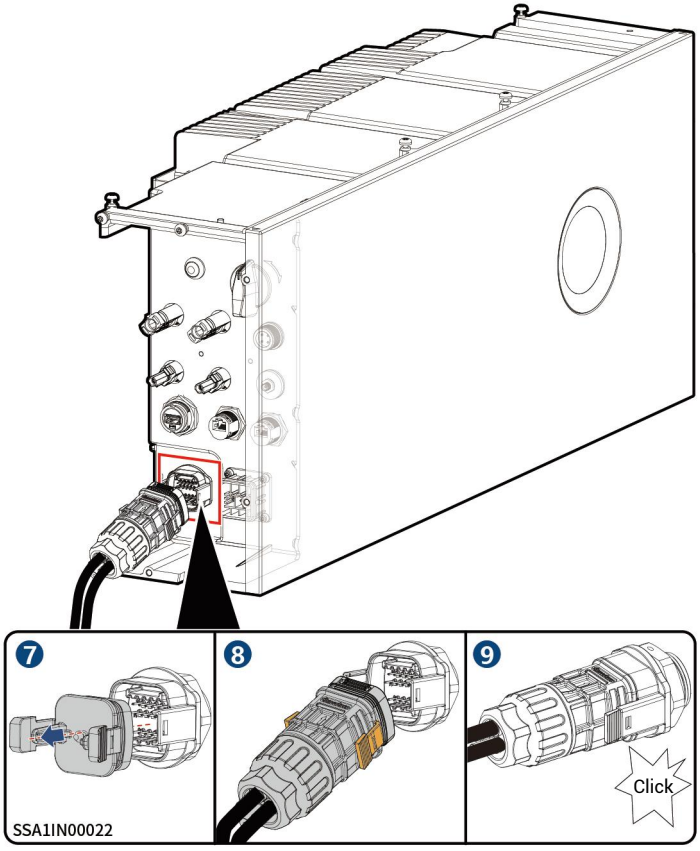

5.5 RJ45 Cable of Inverter

Tips

- **Two RJ45 network ports: One for the router.**
- **RJ45 cables are EIA/TIA 568B standard cable.**

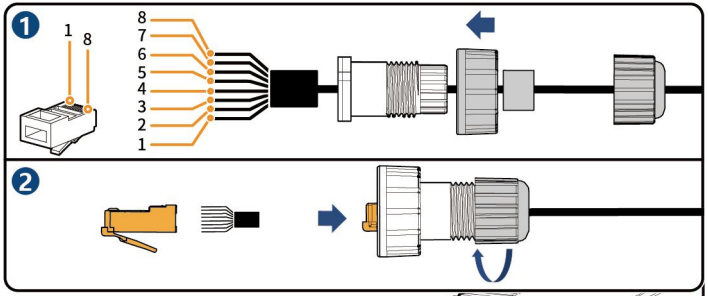

① White orange
② Orange
③ White green
④ Blue
⑤ White blue
⑥ Green
⑦ White brown
⑧ Brown

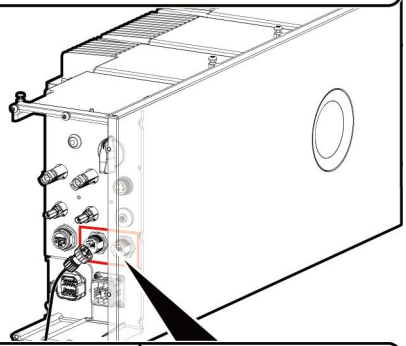

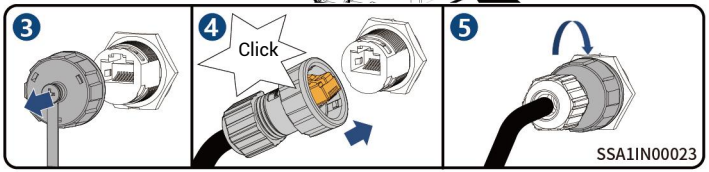

5.6 Sigen CommMod Installation

Tips

Sigen CommMod is required for 4G communication.

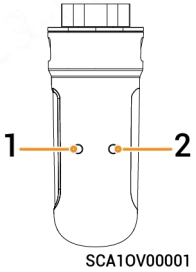

S/N	Indicator	Description
1	Power indicator	–
2	Network state indicator	• Slow flashing (200ms on/1800ms off): The network is being connected • Slow flashing (1800ms on/200ms off): Standby • Quick flashing (125ms on/125ms off): Data is being transferred

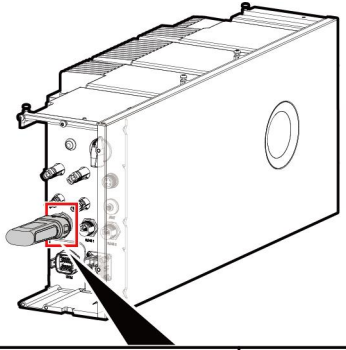

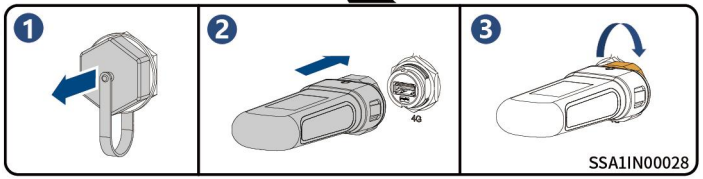

5.7 WLAN antenna stick Installation

Tips

WLAN communication requires the installation of WLAN antenna stick.

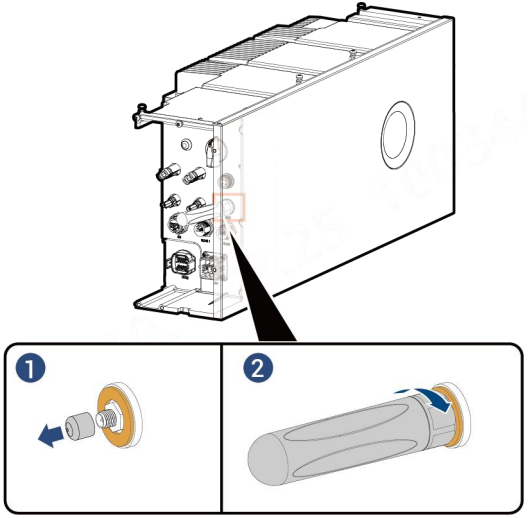

SHA1IN00009

5.8 DC input cable of Inverter

Tips

The DC cable is connected to the inverter from the PV string.
The equipment is not suitable for using with functionally earthed arrays, so such use is prohibited.

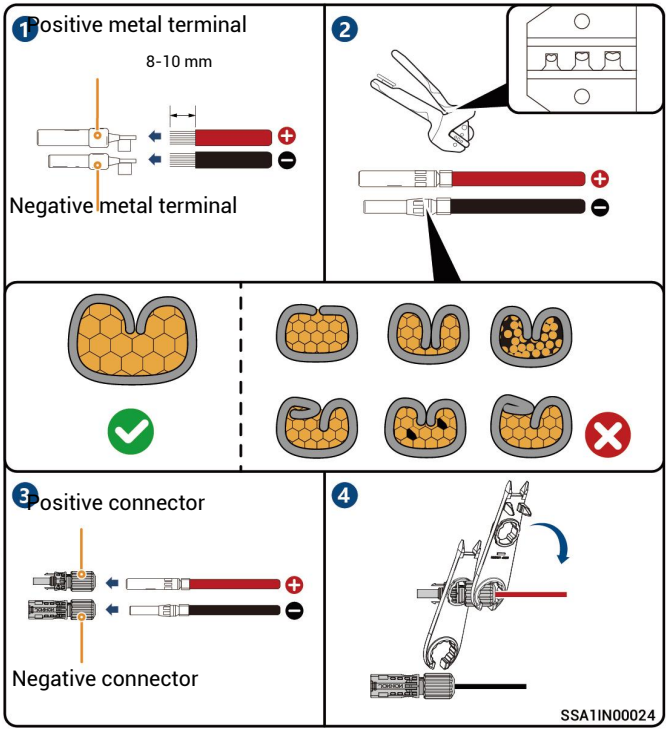

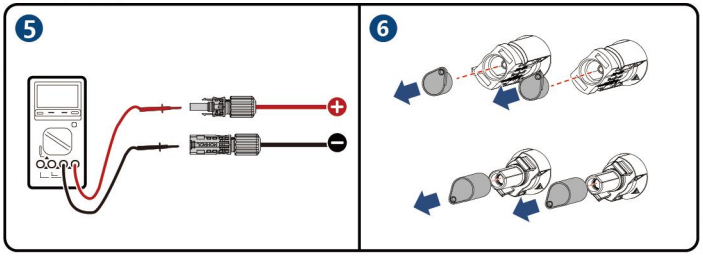

Caution

- **If the voltage is negative, the polarity is incorrect. Rectify the fault in time.**
- **If you have only one DC input, connect it to PV1.**

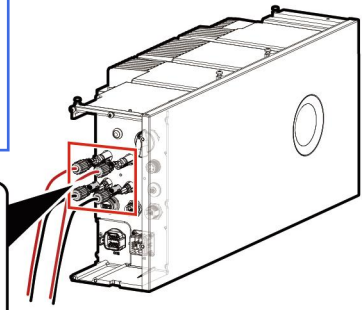

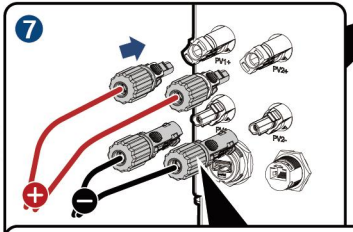

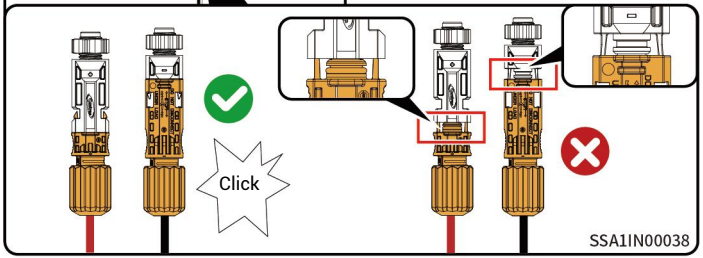

6 Post-installation Check

S/N	Check Item
1	The equipment has been securely installed.
2	Ground cables, DC cables, signal cables, etc. are installed accurately without leftovers.
3	The cable fastening screws or terminals are properly installed.
4	There are no sharp spikes or acute angles at the cut point of the cable tie.
5	DC SWICH is in the OFF state.
6	Ports that are not in use have waterproof covers or plugs installed.
7	There is no construction left inside or outside the equipment.

After confirmation, install the SigenStor BAT and SigenStor EC/SigenStor AC/Sigen Hybrid decorative covers.

7 Installation of the Decorative Cover

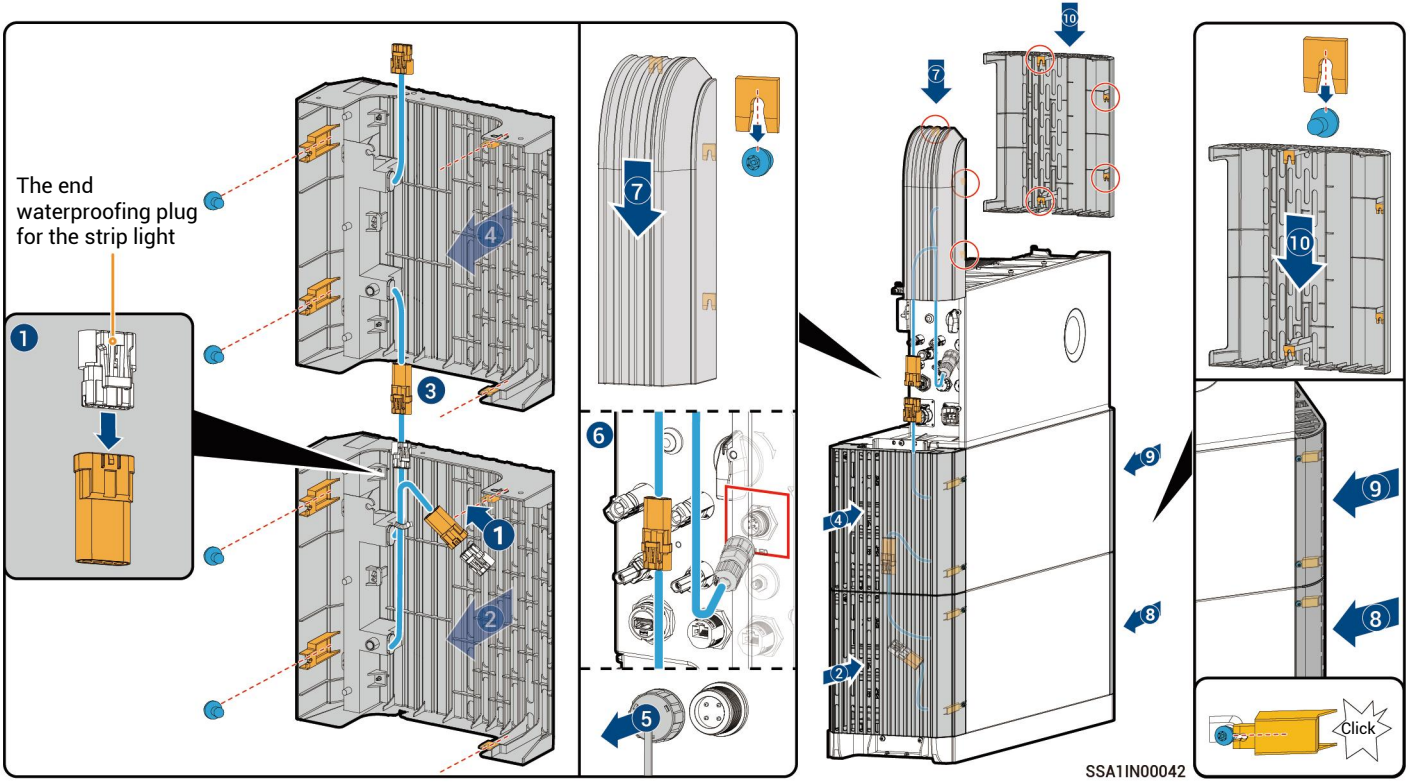

Caution

- The end waterproofing plug for the strip light in step 1 is at the lower end of the decorative cover on the left side of the inverter, please remove it for spare.
- If the equipment is not equipped with a decorative cover light strip, ignore Steps 1 3 5 6 in the figure.

8 Equipment Power-On

1. **Turn on the front switch of the equipment.**
2. **Rotate DC SWITCH to ON. (This step is not necessary for SigenStor AC)**
3. **Observe the indicators on the front side of the inverter to learn about the equipment status.**

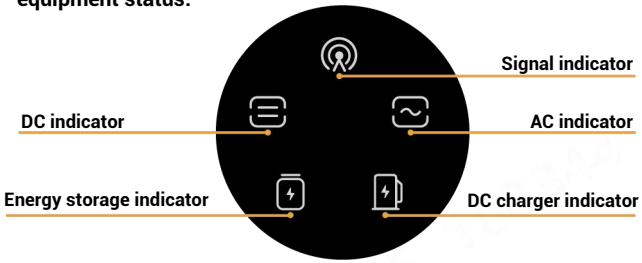

SSA1IN00027

Indicator	Color	State	Description
		Always on	The DC side is connected but not running.
		Always on	The DC side is running.
		-	The DC side is not connected.
		Flash	The DC side is faulty.
		Always on	The inverter is faulty.
		Always on	The AC side is connected but not running.
		Always on	Grid-connected operation.
		Always on	Off-grid operation.
		-	The AC side is not connected.
		Flash	Off-grid overload operation.
		Flash	The AC side is faulty.
		Always on	The inverter is faulty.

Indicator	Color	State	Description
		Always on	All SigenStor BATs are connected but not running.
		Flash	SigenStor BAT is charging.
		Flash	SigenStor BAT is discharging.
		-	All SigenStor BATs lie dormant.
		Flash	Some SigenStor BATs are faulty.
		Always on	All SigenStor BATs are faulty.
		-	The management system is not connected.
		Flash	Connected to local App.
		Always on	Connected to the management system using an FE or WLAN.
		Always on	Connected to the management system over 4G.

After powering on the equipment, install the remaining decorative covers.

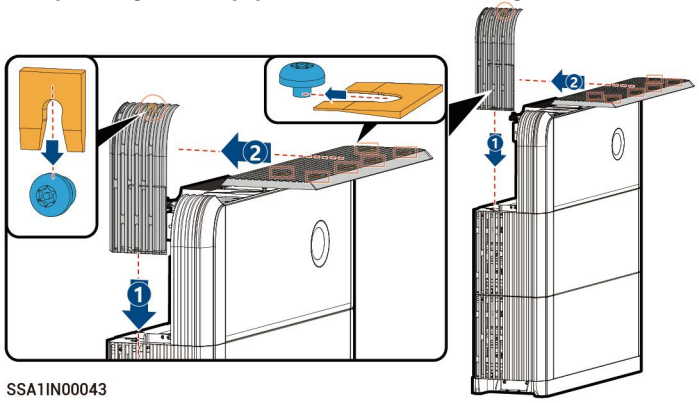

SSA1IN00043

9 Download and create new system for mySigen APP

1 **Please enter the "Partner" → "Register Now" at the Company's official website (https://www.sigenergy.com), and complete the account registration based on facts.**

2 **Download the mySigen App and create new system for the device.**

Tips

Do not use only WLAN communication for creating the new system. To use the WLAN, install Sigen CommMod or RJ45 network cables at the same time. Otherwise, it would be impossible to create the new system.



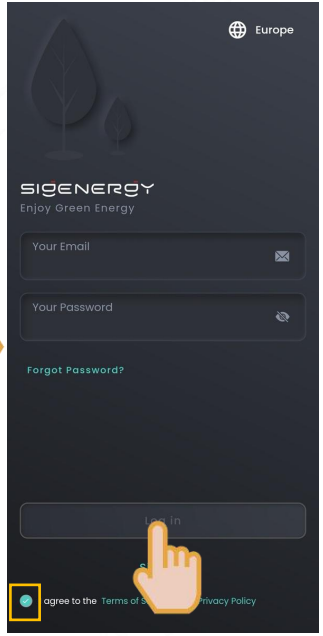

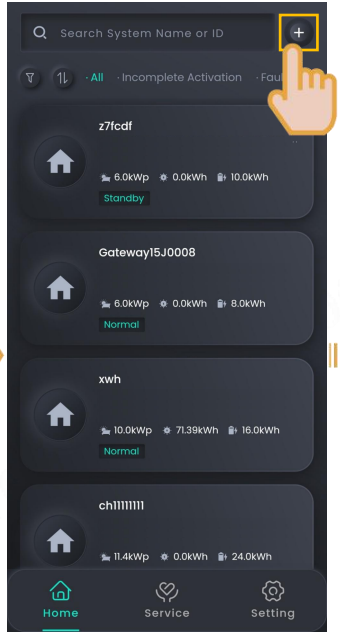

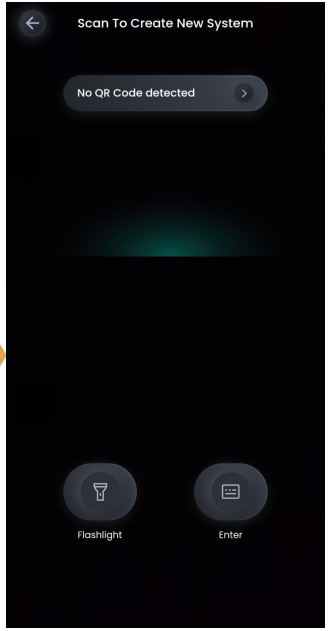

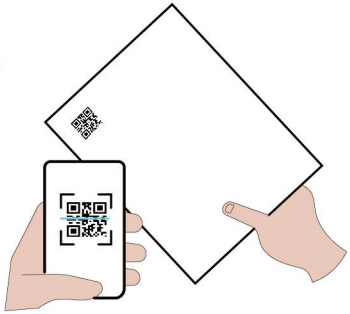

or

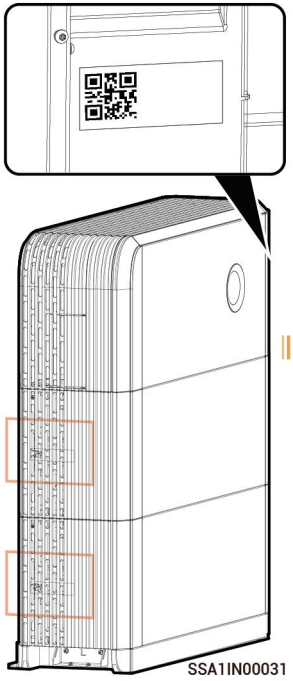

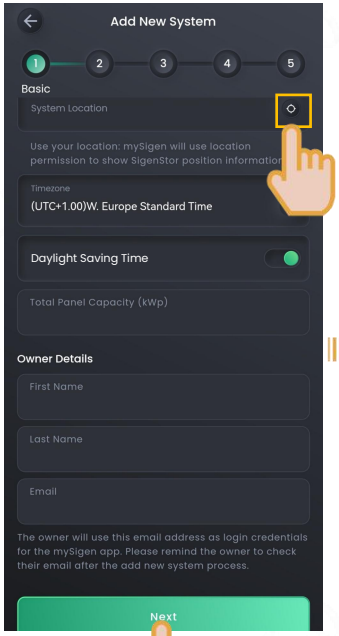

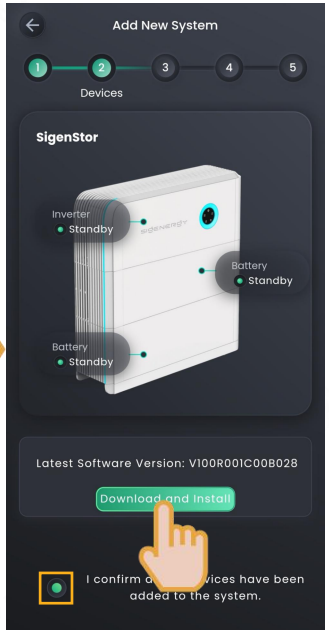

Scan the SN code label on the accompanying box material. If the SN is lost, scan the SN on the side of the inverter or SigenStor BAT.

Locate the address manually and complete the Total Panel Capacity and Owner Details.

If an upgrade is required, perform the upgrade.

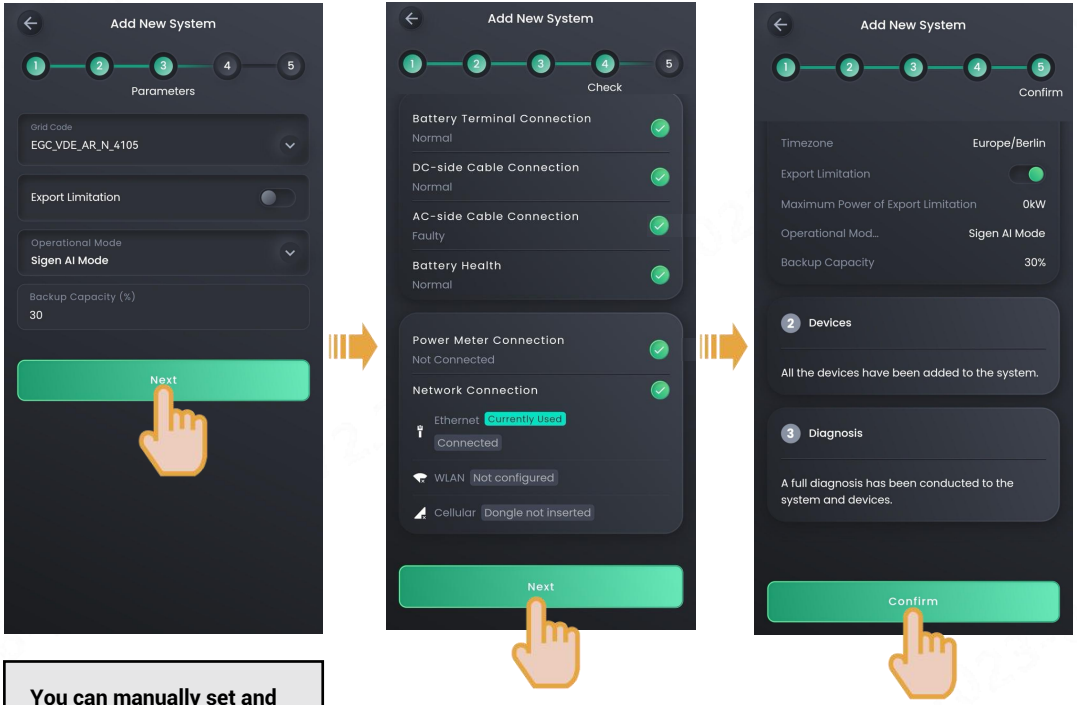

You can manually set and modify some function parameters of the power station.

3 **Upon completion of the new system creation, the installer shall inform the owner to check its "sigencloud" e-mail within 24 hours and proceed with activating its account.**

Sigenergy Technology Co., Ltd.

Website	LinkedIn	YouTube

www.sigenergy.com

Copyright © Sigenergy Technology Co., Ltd. 2023. All rights reserved.

Description in this document may contain predictive statements regarding financial and operating results, product portfolio, new technology, configurations and features of product. Several factors could cause difference between actual results and those expressed or implied in the predictive statements. Therefore, description in this document is provided for reference purpose only and constitutes neither an offer nor an acceptance. Sigenergy Technology Co., Ltd. may change the information at any time without notice.